| REV | DATE | REVISION RECORD | DWN | AUTH |
|---|---|---|---|---|
| - | 05-29-13 | Initial Release | PAC | |
| | | | | |
| | | | | |
| | | | | |
| | | | | |
| | | | | |

**OUTPUT**
**Frequency**
160 MHz
**Level**
+13 dBm ±2 dB into 50 ohms
**STABILITY**
**Aging**
$1 \times 10^{-6}$ per year
after 30 days operating, typical
**Phase Noise L(f), Static**

| | |
|---|---|
| 100 Hz | -118 dBc/Hz |
| 1 kHz | -148 dBc/Hz |
| 10 kHz | -168 dBc/Hz |
| 100 kHz | -170 dBc/Hz |

**Temperature Stability**
$\pm 5 \times 10^{-7}$, 0° to +50°C (Ref +25°C)
**Harmonics**
≤ -30 dBc
**Spurious**
≤ -90 dBc, excluding power supply line related spurs
**MECHANICAL**
**Dimensions**
2 x 2 x 0.7”
**Connectors**
SMA(f) and solder pins on side
**Packaging**
Nickel-plated machined aluminum case (CV-1A)
**POWER REQUIREMENTS**
**Warm-Up Power**
≤ 6 Watts for 5 minutes
**Total Power**
≤ 3 Watts at +25°C
**Supply Voltage**
+15 VDC ±5%
**ADJUSTMENT**
**Mechanical Tuning**
$\pm 4 \times 10^{-6}$
**Electrical Tuning**
$\pm 2 \times 10^{-7}$, ±5 VDC
Negative slope

**CRYSTAL**
**Type**
160 MHz SC-Cut (low-g)
**Acceleration Sensitivity**
$\leq 5 \times 10^{-10}$/g per axis, typical
**ENVIRONMENTAL**
**Operating Temperature**
0° to +50°C
**Storage Temperature**
-40° to +85°C
**OTHER**
**Label**
Use conventional label with the following information:
501-26864 (Current Rev.)
160 MHz Citrine
+15 VDC
Serial # - Date Code
**Test Data**
Output Level
Phase Noise, Static
Temperature Stability
Harmonics, Spurious
Power – Warm-up and Total
Tuning – MT and ET

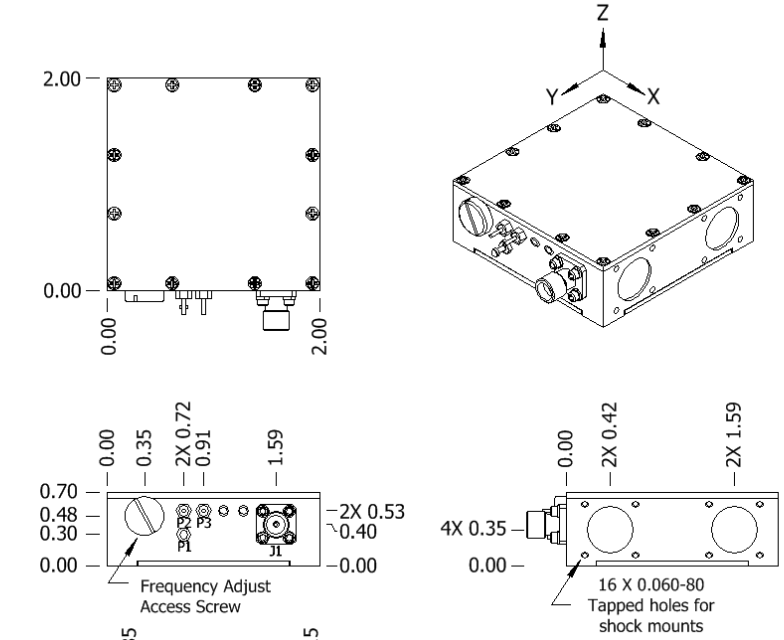


| CV-1A | |
|---|---|
| Connector | Function |
| P1 | Ground, Case |
| P2 | Supply Voltage |
| P3 | Electrical Tuning |
| J1 | RF Output |

Connector numbers are for reference only and will not be marked on unit.

**Wenzel Associates, Inc.**
Austin, Texas

Title:
**Standard 160 MHz-SC Citrine Crystal Oscillator**

| P/N: | Rev: | Date: | Drawn: | Ref: |
|---|---|---|---|---|
| **501-26864** | **-** | **05-29-13** | | SPR |

| Tolerances: (except as noted) Dimensions are in inches | 0.XX Dec: | 0.XXX Dec: | FSCM: | |
|---|---|---|---|---|
| | ±0.030” | ±0.010” | 62821 | Page 1 of 1 |