REV	DATE	REVISION RECORD	DWN	AUTH
-	06-21-13	Initial Release	PAC	

OUTPUT A (J2)
Frequency
80 MHz
Level
+13 dBm ±2 dB into 50 ohms
Phase Noise L(f), Static
100 Hz -132 dBc/Hz
1 kHz -160 dBc/Hz
10 kHz -176 dBc/Hz
100 kHz -176 dBc/Hz
OUTPUT B (J1)
Frequency
160 MHz
Level
+13 dBm ±2 dB into 50 ohms
Phase Noise L(f), Static
100 Hz -125 dBc/Hz
1 kHz -153 dBc/Hz
10 kHz -169 dBc/Hz
100 kHz -170 dBc/Hz
STABILITY
Aging
1×10^{-6} first year
after 30 days operating, typical
5×10^{-7} second year, typical
3×10^{-7} per year thereafter, typical
Temperature Stability
$\pm 5 \times 10^{-7}$, 0° to +50°C (Ref +25°C)
Harmonics
≤ -25 dBc
Sub-Harmonics
≤ -50 dBc
Non-Harmonic Spurious
≤ -80 dBc, excluding power supply line related spurs
MECHANICAL
Dimensions
2" x 2" x 1.3"
Connectors
SMA(f) and solder pins on one side
Packaging
Nickel-plated machined aluminum housing (CVP-2A)

Mounting
Threaded inserts, # 2-56, 4 places
Tapped holes on sides, 16 places
(provisions for shock mounts)
POWER REQUIREMENTS
Warm-Up Power
≤ 7 Watts for 5 minutes at +25°C
Total Power
≤ 5 Watts at +25°C
Supply Voltage
+15 VDC ±5%
ADJUSTMENT
Mechanical Tuning
$\pm 4 \times 10^{-6}$
Electrical Tuning
$\pm 2 \times 10^{-7}$ min, ±5 VDC
Negative slope
CRYSTAL
Type
80 MHz SC-cut (x2)
Acceleration Sensitivity
$\leq 5 \times 10^{-10}$ /g per axis, typical
ENVIRONMENTAL
Operating Temperature
0° to +50°C
Storage Temperature
-40° to +85°C
OTHER
Label
Use conventional label with the following information:
501-26945 (Current Rev.)
80/160 MHz Citrine Plus
+15 VDC
Serial # - Date Code
(Mark connectors with function)
Test Data
Output Level
Phase Noise – Static
Temperature Stability
Harmonics, Subs, Spurious
Power - Warm-up and Total
Tuning – MT and ET

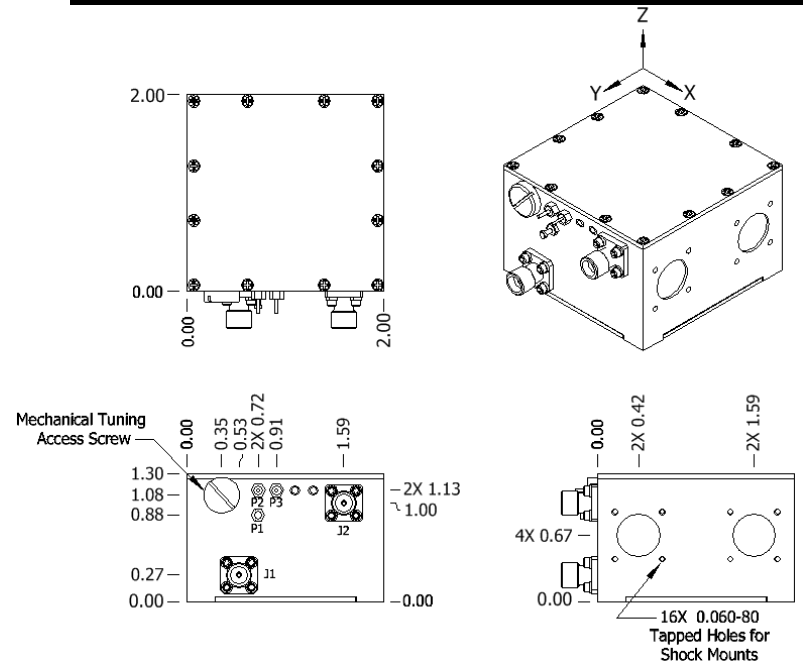

CVP-2A	
Connector	Function
P1	Ground, Case
P2	Supply Voltage
P3	Electrical Tuning
J1	RF Output B
J2	RF Output A

Connector numbers are for reference only and will not be marked on unit.

Wenzel Associates, Inc.
Austin, Texas

Title:
Premium 80/160 MHz Citrine Plus Crystal Oscillator

P/N:	Rev:	Date:	Drawn:	Ref:
501-26945	**-**	**06-21-13**		ULN

Tolerances: (except as noted) Dimensions are in inches	0.XX Dec:	0.XXX Dec:	FSCM:	Page 1 of 1
	±0.030"	±0.010"	62821	